CONNECTION DRAWING NO.

DRAWING NO. 2-A254378

MARK	REVISIONS	DATE	REVISED BY	APPROVED BY

作業	D	d	備考
A	$8^{+0.015}_{0}$	$8^{-0.005}_{-0.014}$	
B	$6^{+0.012}_{0}$	$6^{-0.004}_{-0.012}$	
C	$5^{+0.012}_{0}$	$5^{-0.004}_{-0.012}$	
D	$6.35^{+0.012}_{0}$	$6.35^{-0.004}_{-0.012}$	

注1. 本機は開放構造のため、必ず密閉カバー等を取付けて下さい。

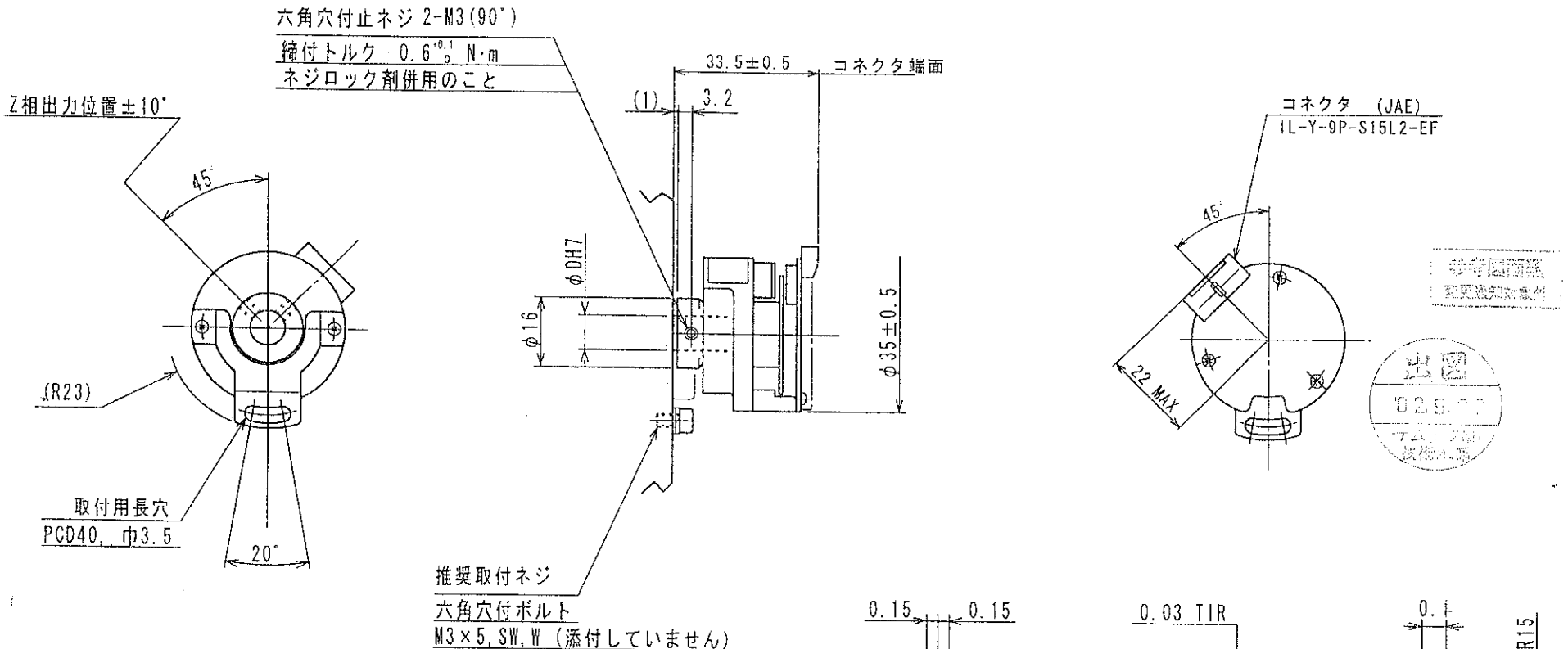

(※2-A254378)

D	C	B	A		DWG. NO., TYPE, NORM.	NAME OF PART	MATERIAL	DIMENTIONS	REMARKS
				CONNECTION CONTENTS	TYPE LHE	DRAWN BY		CHECKED BY 99.3.25	
					コネクタ出力	DESIGNED BY 99.3.25		APPROVED BY 99.3.26	
					P.C.D.=40mm	SUMTAK CO., LTD.		UNITS mm	3RD. ANGLE PROJECTION
					SCALE 1/1	TITLE 外形図		DRAWING NO. 2-A254378	

PROVIDE

PHOTOGRAPH

WAREHOUSING

97/01 WRAP105